Paulmann

Safety Instructions

1, 2, 3, 4, 5, 6, 7, 10, 12, 13, 15, 16, 17, 18, 19, 22, 28, 29, 30, 31, 32, 33, 34

Info

www.paulmann.com

Paulmann Licht GmbH
Quezinger Feld 2
31832 Springe
Germany

www.paulmann.com

Art.-Nr.: **929.07**

(+MA326) PSU 07/17

CE

IP23

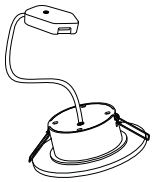

3x

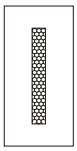
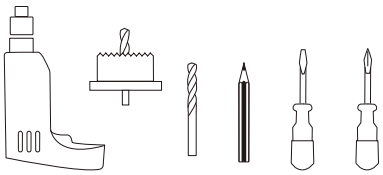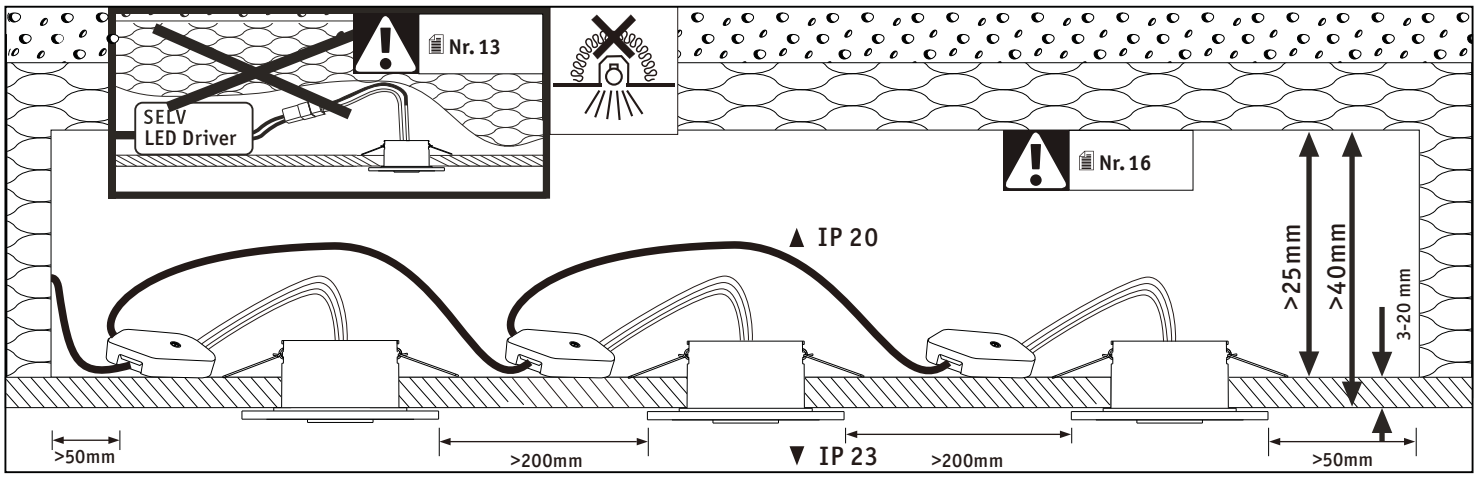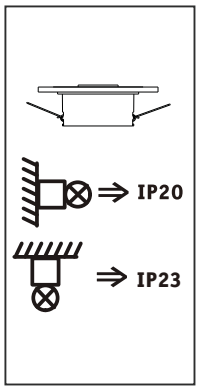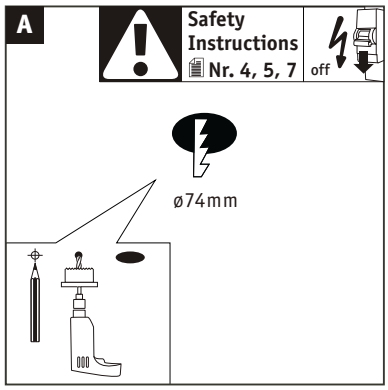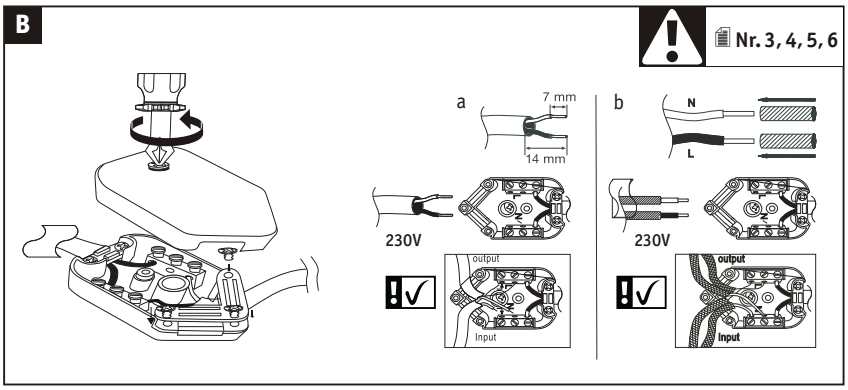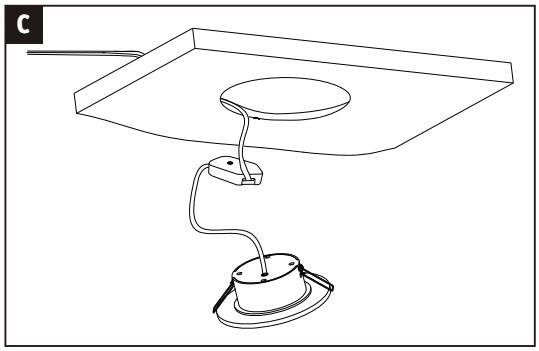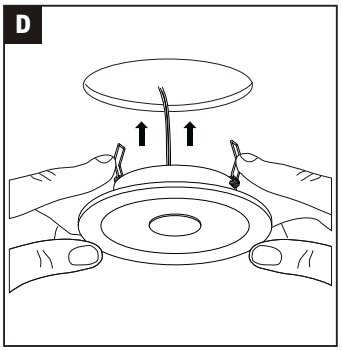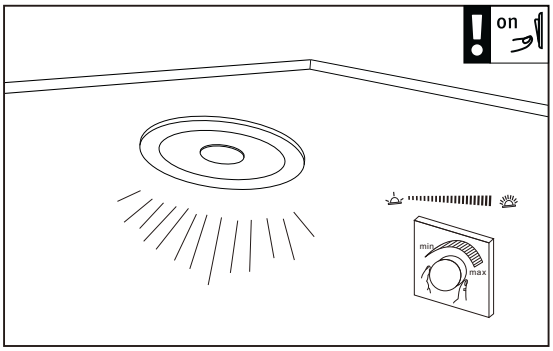
Incl.