Paulmann

Safety Instructions

1, 2, 3, 4, 5, 6, 7,
9, 11, 12, 13, 14,15,
16,17,18,19,21,22,
23,25,28,30,31,34,

Info Hotline +49 (0) 5041 998 389
Mon.–Do. 7⁰⁰ - 20⁰⁰
Fr. 7⁰⁰ - 17⁰⁰

Paulmann Licht GmbH
31832 Springe/ Germany
www.paulmann.com

Art.-Nr.:
977.71
977.01

(+MA 197)
PDG 08/09

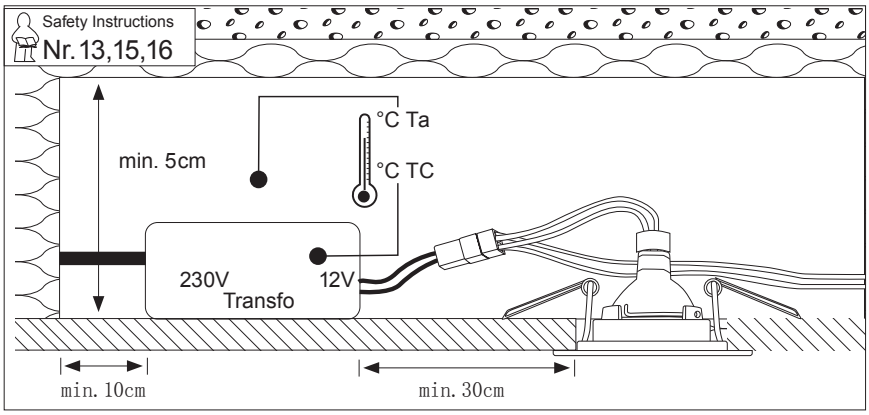

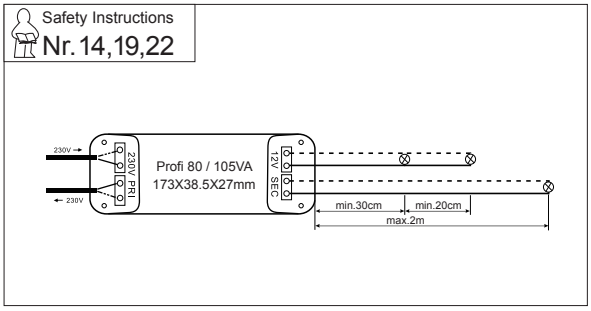

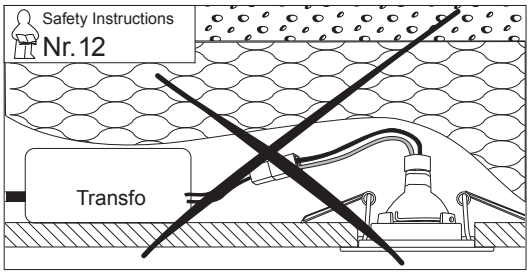

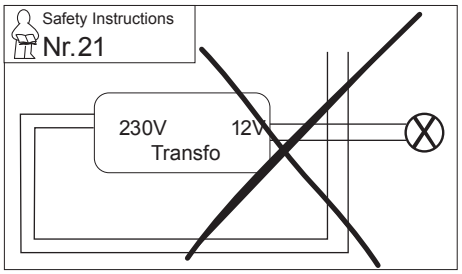

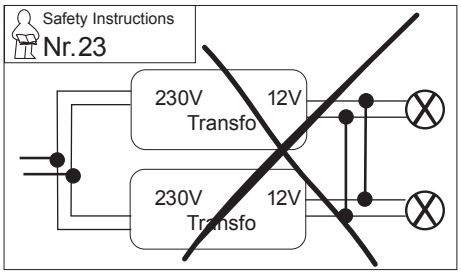

Transfo Profi 80 /105VA

☑ R,L,C — Safety Instructions Nr.28a/b

☐ R,C — Safety Instructions Nr.28a

Ta: -20...+50°C
80VA TC: +85°C
105VA TC: +90°C

14mm
7mm
230V PRI

- ☑ H03VVH2-F
- ☑ H03VV-F
- ☑ H05VVH2-F
- ☑ H05VV-F

} 2x 0. 75mm²

☑ NYM3x2. 5mm²

12V SEC
14mm
7mm

min. 0. 75mm² ×4
or 1. 5mm² ×2

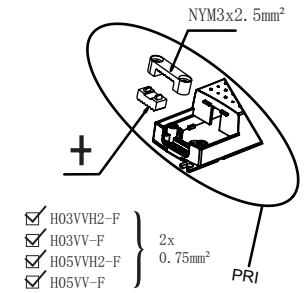

- ☑ H03VVH2-F
- ☑ H03VV-F
- ☑ H05VVH2-F
- ☑ H05VV-F
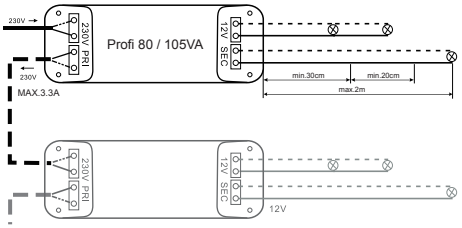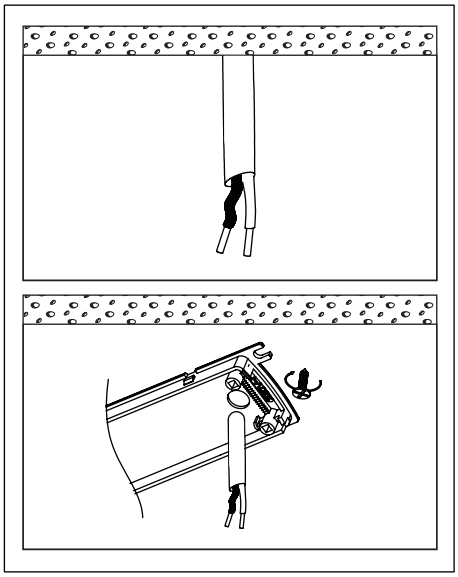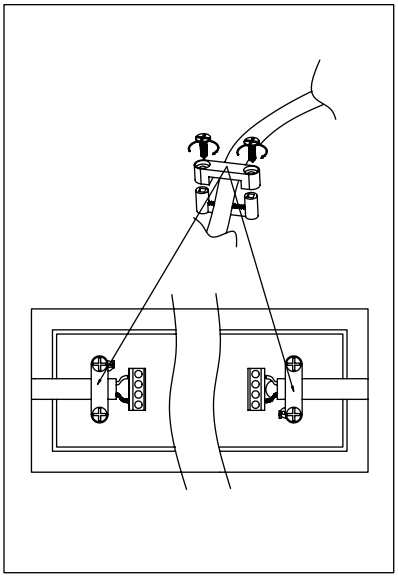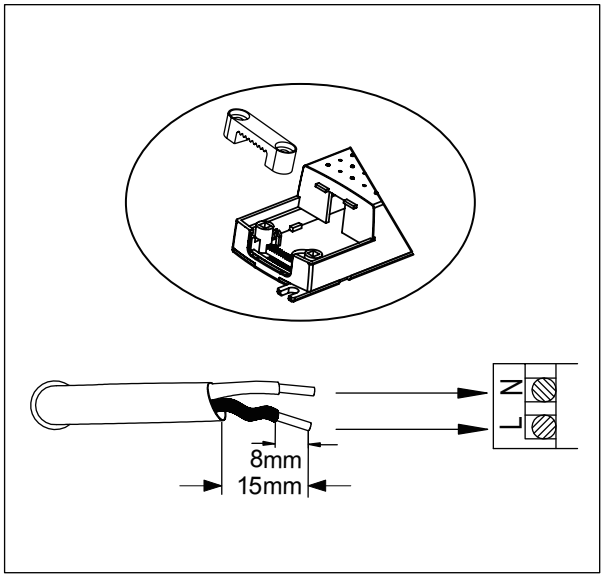
} 2x 0. 75mm²